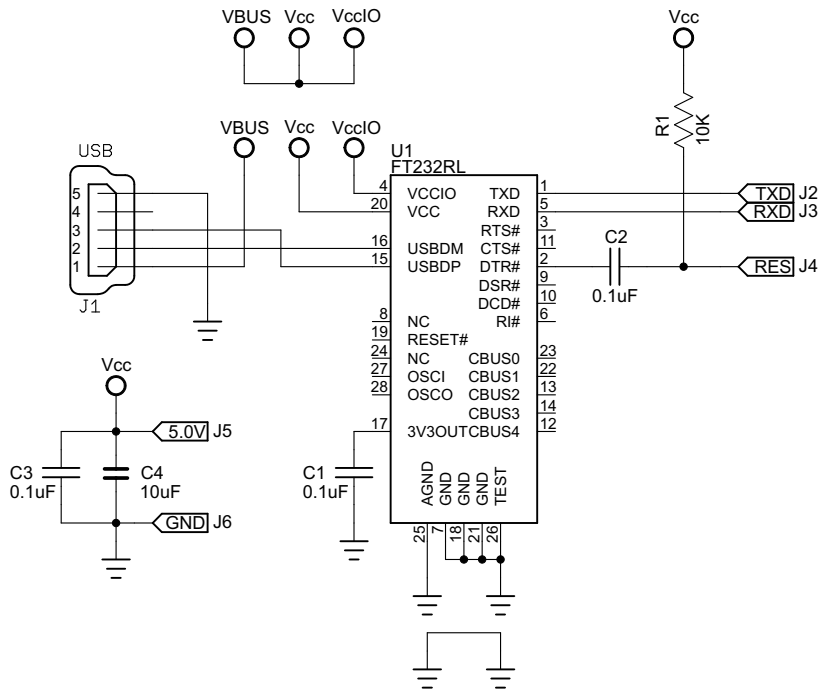

USB-TTL Adapter version 1.1
Dale Wheat - 23 October 2010